IRON CORE LINEAR MOTORS

SERIES

SKA DDL 150.2400

FORCE [N]

2400

SINEWAVE FORM	SYMBOL	UNITS	TYPE OF WINDING XX = preferential winding										
						17							
MOTOR SPEED													
Vn drive 145 V (ac) 3phase		[m/s]				1.1							
Vn drive 230 V (ac) 3phase		[m/s]				1.5							
Vn drive 400 V (ac) 3phase		[m/s]				3							
MOTOR RATINGS													
COMMON RATINGS													
Voltage constant ± 5%	Ke	[Vrms/m/s]				97							
Pole pitch	P	[mm]					24						
Temperature range	Tr	[°C]					0 ÷ 40°						
SKA DDL 150.2400													
Continuous force(0 m/s)	Fn0	[N]					2400						
Peak force	Fmax	[N]					7200						
Force constant ± 5%	Kf	[N/Arms]				151							
Rated current (0 m/s)	In0	[Arms]				16.27							
Peak current	I fmax	[Arms]				52.9							
Phase/phase res. ± 5% a 20°C	Rff	[Ohm]				1.25							
Phase/phase inductance	Lff	[mH]				26							
Electrical time constant	Te	[msec]					20						
Attraction force	Fm	[N]					11790						
Power loss	Pd	[W]					700						
Thermal resistance	Rth	[°C/W]					0.13						
Motor constant	Km	[N/√W]					90.7						
Continuous force(0 m/s)	Fn0	[N]											
Peak force	Fmax	[N]											
Force constant ± 5%	Kf	[N/Arms]											
Rated current (0 m/s)	In0	[Arms]											
Peak current	I fmax	[Arms]											
Phase/phase res. ± 5% a 20°C	Rff	[Ohm]											
Phase/phase inductance	Lff	[mH]											
Electrical time constant	Te	[msec]											
Attraction force	Fm	[N]											
Power loss	Pd	[W]											
Thermal resistance	Rth	[°C/W]											
Motor constant	Km	[N/√W]											

THERMAL PROTECTION			
Type of thermal cut-off			N C : normally closed
Rated voltage	Vn	[Vac]	250
Rated current	In	[A]	2.5
Operative temperature	Tn	[°C]	130 °C ± 5%
Resetting temperature	Tr	[°C]	100 °C ± 15°C
Operative time		[ms]	1
Insulation class			F

Datasheet n°: SKADDL – 2008-03-00

IRON CORE LINEAR MOTOR

SERIES

SKA DDL 150

FORCE [N]
2400

MOTOR DIMENSIONS

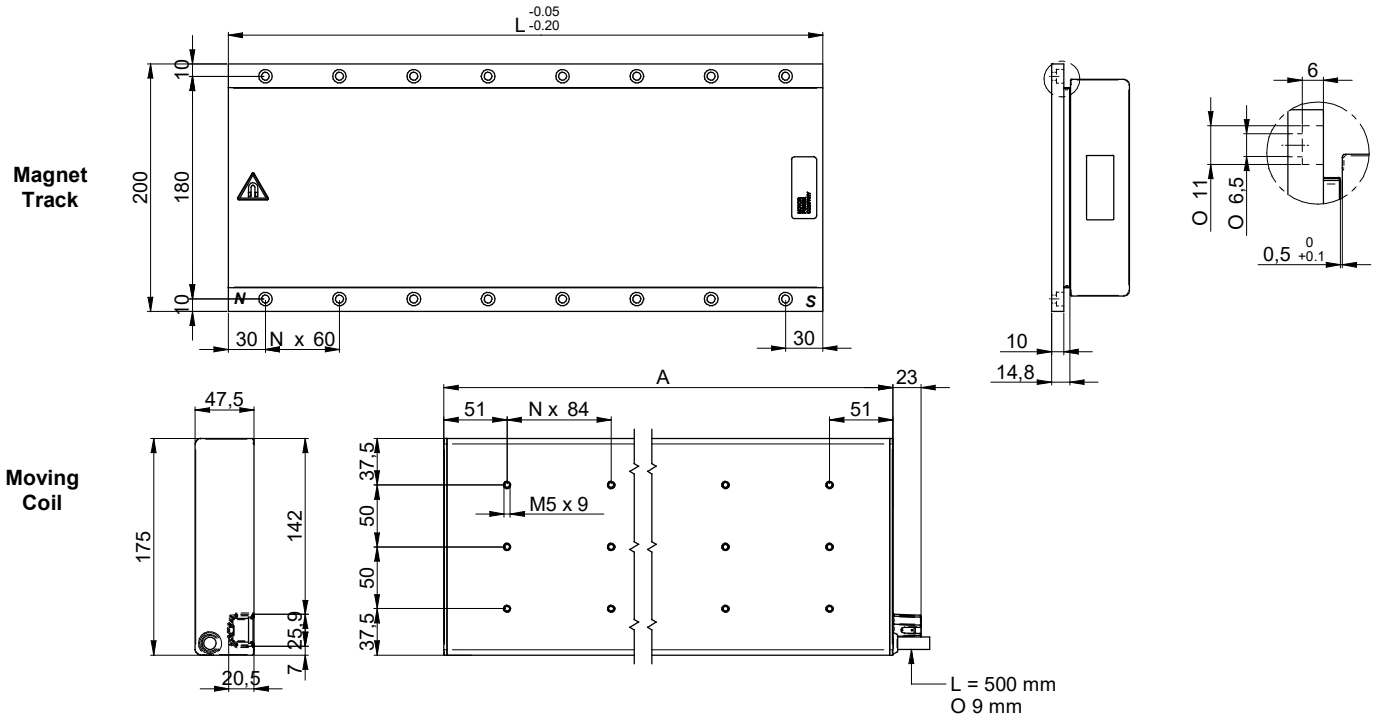

Magnet Track		Moving Coil	
Type	L (mm)	Type	A (mm)
150-120	120	150.2400	690
150-240	240		
150-480	480		

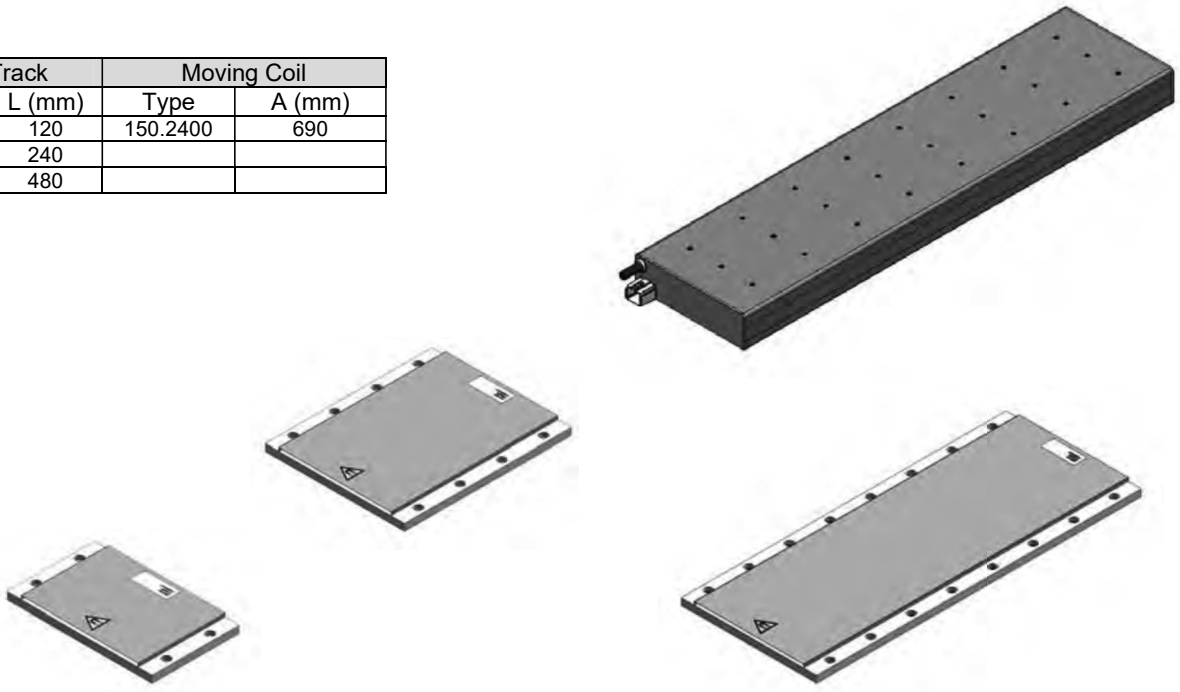

Datasheet n°: SKADDL-2008-03-00