NOTES: (UNLESS OTHERWISE SPECIFIED)
1. ALL DIMENSIONS ARE IN mm UNLESS OTHERWISE NOTED
2. LINEAR SPECIFICATIONS:
   LINEAR STROKE: 50 +1/-0 mm
   FORCE CONSTANT: 8.5 N / A (24 VDC)
   PEAK FORCE: 20 N @ 3.5A A (24 VDC)
   COIL DC RESISTANCE: 6.7 OHMS ± 1%
   COIL INDUCTANCE: TBD mH ± 10%
   ENCODER RESOLUTION: 5.0, 1.0 um
   ENCODER ACCURACY: ± 5 COUNTS
   ELECTRICAL POLE PITCH: 33.4mm
3. THETA SPECIFICATION:
   ROTARY MOTOR: DC BRUSHLESS, 2 POLES
   (DIRECT DRIVE)
   PEAK TORQUE: 60 mNm @ 3 A
   TORQUE CONSTANT: 13.5 mNm / A
   SUPPLY VOLTAGE: 24 VDC ± 10%
   ENCODER SUPPLY VOLTAGE: 5 VDC
   ENCODER RESOLUTION: 0.0088° (40960 COUNTS / 360°)
4. MOVING MASS: 0.250 Kg
5. TOTAL MASS: 1.0 Kg
6. OPERATING TEMPERATURE: 5°C TO +40°C

REVISION HISTORY				
REV	DATE	ECN	DESCRIPTION	APPROVED
B	10/5/2011		PROTO	TMV

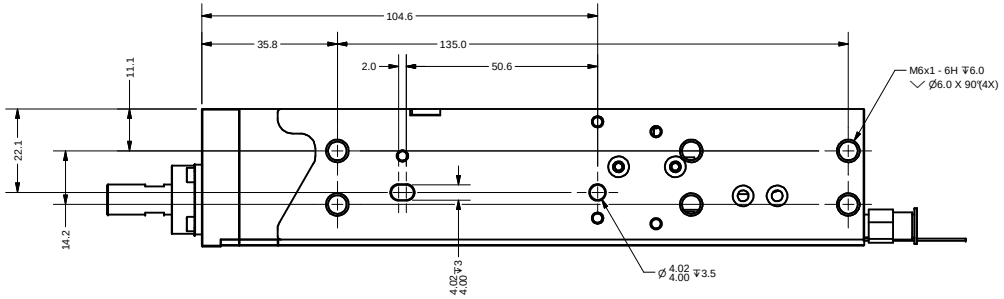

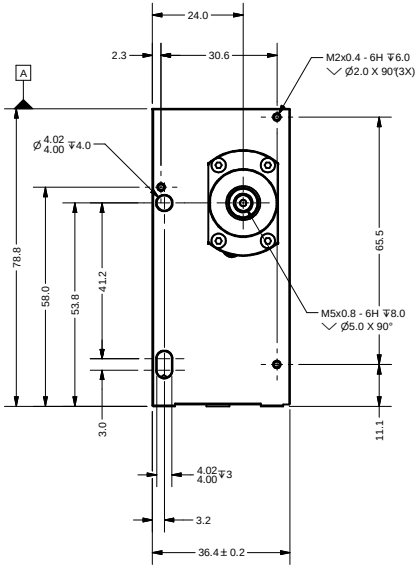

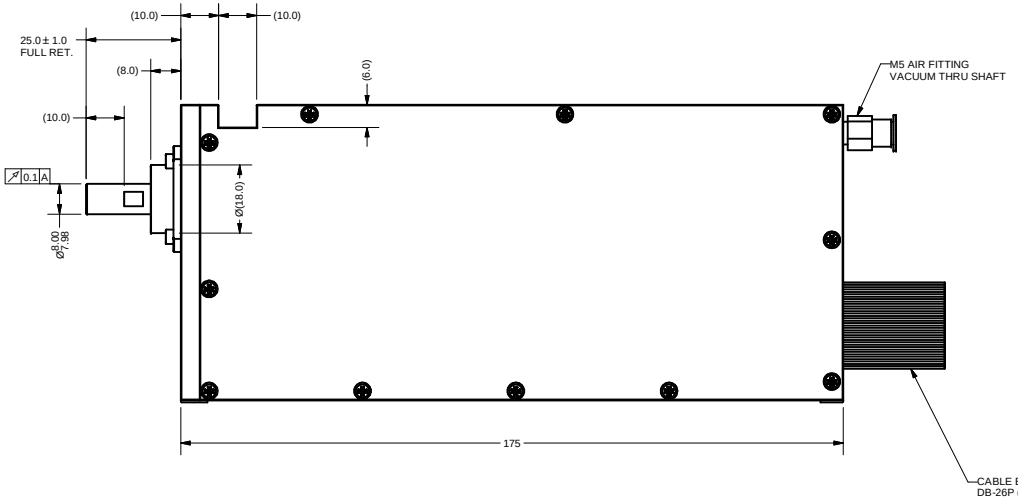

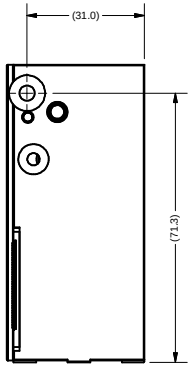

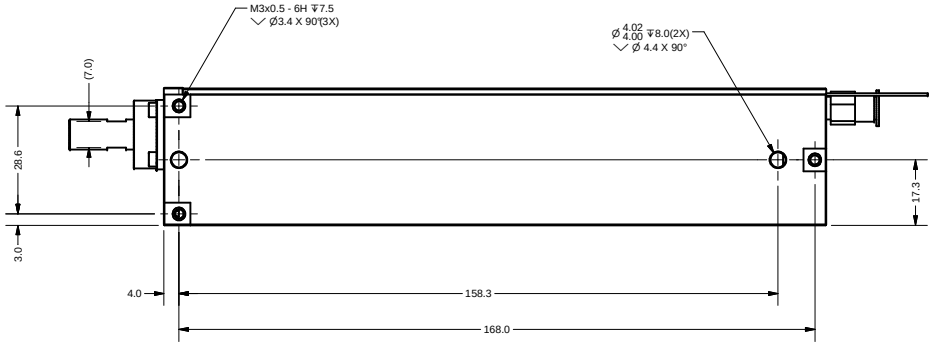

DB-26P			
No	Details	No	Details
1	(L) PH. A+	14	NC
2	(L) PH. B+	15	NC
3	(L) PH. Z+	16	(R) PH. B-
4	NC	17	(R) PH. A-
5	NC	18	(R) PH. I-
6	NC	19	+5VDC
7	(R) PH. B+	20	5V RTN
8	(R) PH. A+	21	(R) W
9	(R) PH. I+	22	(L) COIL U
10	(L) PH. A-	23	(L) COIL V
11	(L) PH. B-	24	(L) COIL W
12	(L) PH. Z-	25	(R) V
13	NC	26	(R) U

TOLERANCES ARE: X. ± 0.50; X.X ± 0.1; X.XX ± 0.05; X.XXX ±; ANGULARITY ± 0.1°; CONCENTRIC ± 0.01; ROUNDNESS ± 0.05; EDGE BREAK 0.02 MAX; CHAMFER 0.03 MAX	MATERIAL: ALUMINUM	SMAC			REF. NUMBER: LAR31-050-1
	HEAT TREATMENT:	DESIGNED BY: Toan Minh	DATE: 10/5/2011	CHECKED BY:	DATE: / CONTRACT: PHS6
		DRAWN BY: TOAN VU	DATE: 10/5/2011	APPROVED BY:	DATE:
	MACHINE FINISH: 3.2 EXCEPT NOTED	PART NAME: LAR31-050-1			SHEET NUMBER: 1 OF 1
FILE NAME: LAR31-050-1_B.idw	PROTECTIVE FINISH: BLACK ANODIZE	SCALE: NONE	DWG SIZE: C	PART NUMBER: LAR31-050-1	REVISION: B
	SPEC. NUMBER:	DO NOT SCALE DWG			