NOTES: (UNLESS OTHERWISE SPECIFIED)

1. ALL DIMENSIONS ARE IN mm OTHERWISE NOTED.
2. LINEAR SPECIFICATION:
   LINEAR STROKE: 25 +1.0/−0 mm
   FORCE CONSTANT: 10 N/AMP
   PEAK FORCE: 12.5 N @ 1.3 AMPS (48 VDC)
   CONTINUE FORCE : 10 N @1 AMPS (48 VDC)
   COIL DC RESISTANCE: 31 OHMS @ 22°C
   COIL INDUCTANCE: 4.12 mH @ 1 kHz
   ENCODER RESOLUTION: 0.5, 1.0, 5.0 Microns
   ENCODER ACCURACY: ±4 COUNTS
3. MOVING MASS: 120 GRAMS
4. TOTAL MASS: 950 GRAMS
5. OPERATING TEMPERATURE: 0°C TO +65°C

SIGNATURE NEEDED FOR ORDER APPROVAL
SIGN _____ DATE _____
APPROVAL NOT RECEIVED WITHIN
48 HOURS MAY AFFECT DELIVERY

REVISIONS

REV	DATE	ECN	DESCRIPTION	APP
A	9/29/03	2923	INITIAL RELEASE	GK
B	10/13/04	3354	SEE ECN ***	CAW
C	8/27/04	3310	SEE ECN	CAW
D	10/1/13	5288	SEE ECN	KGS
E	1/15/16	5688	PART NUMBER CHANGE	SB

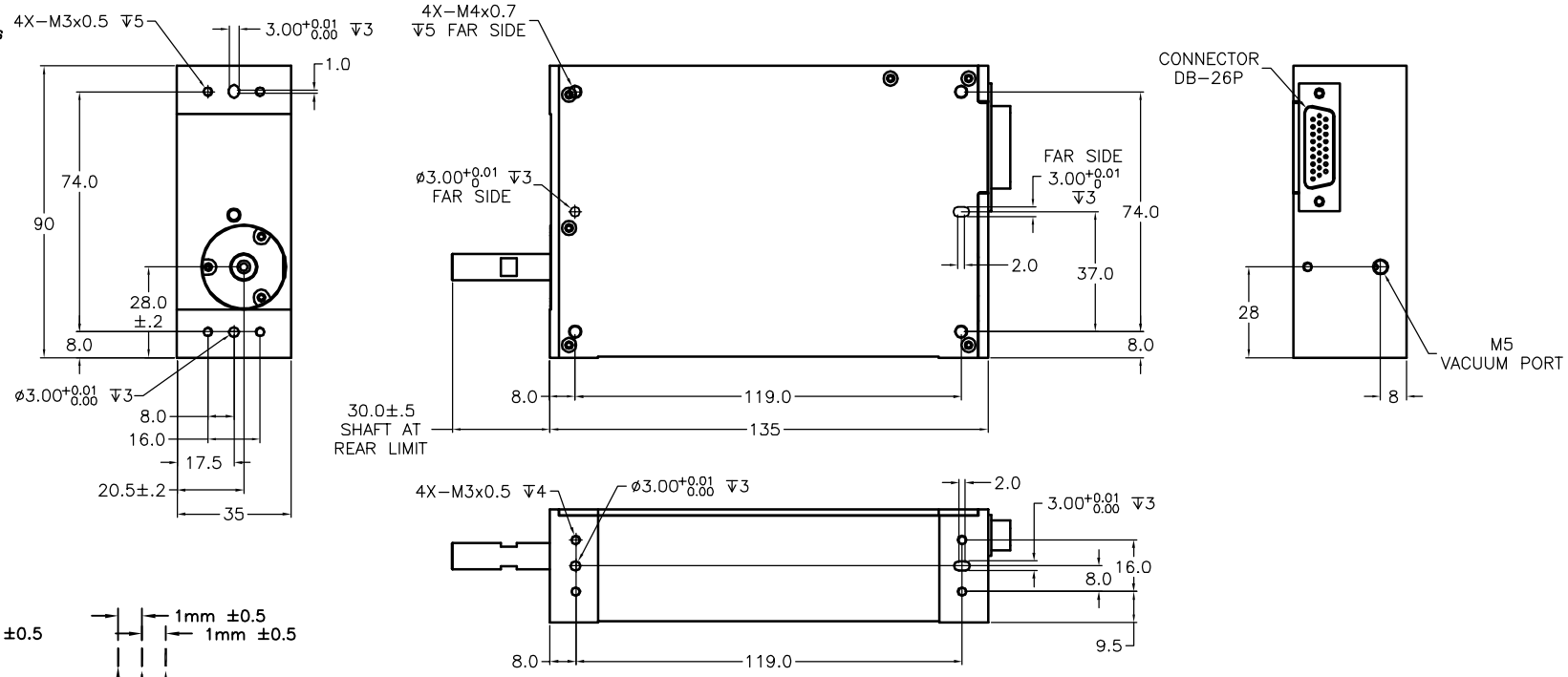

DB−26P PINOUT

1	(L) PH. A+
2	(L) PH. B+
3	(L) PH. Z+
4	NC
5	NC
6	I/O RTN
7	NC
8	NC
9	NC
10	(L) PH. A−
11	(L) PH. B−
12	(L) PH. Z−
13	NC
14	LIMIT +
15	LIMIT −
16	NC
17	NC
18	NC
19	+5VDC
20	5V RTN
21	(L) COIL +
22	(L) COIL +
23	(L) COIL −
24	(L) COIL −
25	NC
26	NC

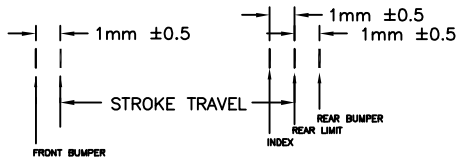

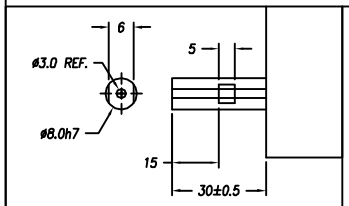

TIP (B): BARE

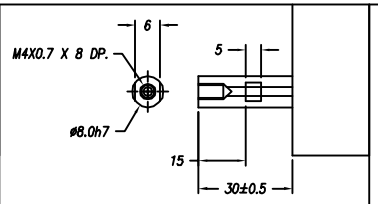

TIP (F) : FEMALE

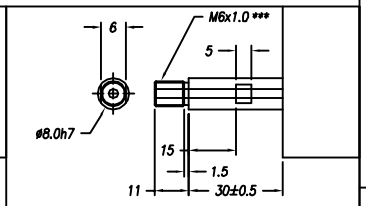

TIP (M) : MALE

TOLERANCES ARE:	
X. ±	0.50
X.X ±	0.1
X.XX ±	0.05
X.XXX ±	
ANGULARITY ±	0.1°
CONCENTRIC ±	0.01
ROUNDNESS ±	0.05
EDGE BREAK	0.02 MAX
CHAMFER	0.03 MAX
FILE NAME:	LAL35−025−7

MATERIAL: ALUMINUM 6061−T6

HEAT TREAT: ____/____ RC ____ DEEP

MACHINE FINISH: 1.6 EXCEPT NOTED.

PROTECTIVE FINISH: ELECTROLESS NICKEL

SPEC. NUMBER:

SMAC

DESIGNED BY: KAMBARA	DATE: 09/26/03	CHECKED BY:	DATE:	REF. NUMBER: LAL35−025−7
DRAWN BY: GORO/KGS	DATE: 10/1/13	APPROVED BY:	DATE:	CONTRACT: STD
PART NAME: LAL35−025−7X−1				SHEET NUMBER: 1 OF 1
SCALE: NONE (DO NOT SCALE DWG)	DWG SIZE: B	PART NUMBER: LAL35−025−7X−1		REVISION: E