FUNCTION	COLOR
MOTOR U	BLUE(14AWG)
MOTOR V	BROWN(14AWG)
MOTOR W	PURPLE(14AWG)

Power Wire

技术要求：
定子引出线按GB/T 7345-2008要求：
对定子三相线，每根引出线应能承受9.0N的拉力；
引出线不能断开，绝缘层和线芯不能损坏。

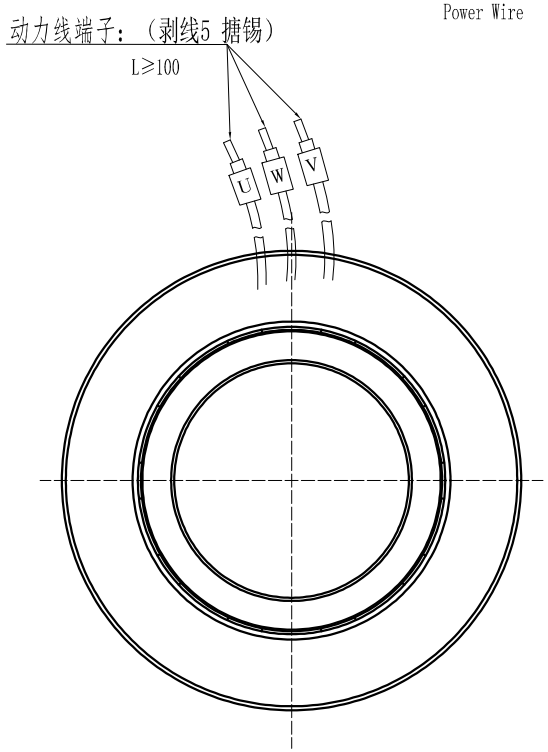

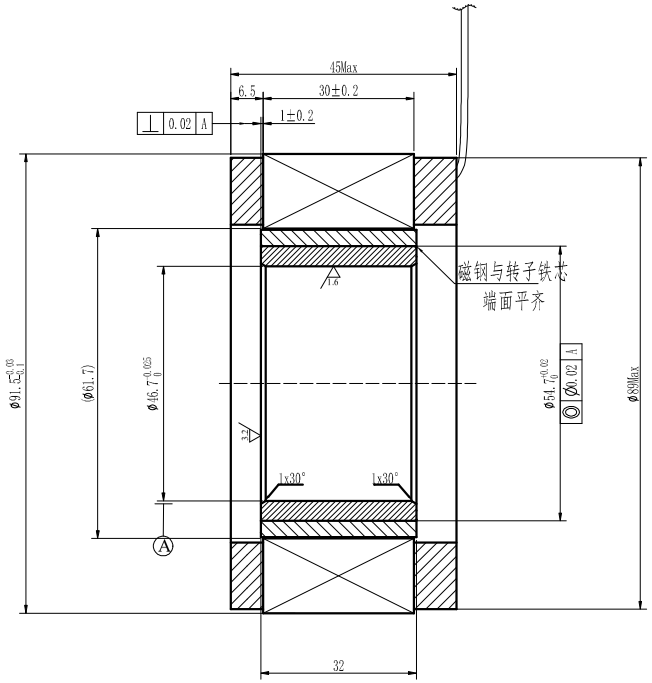

Tecnical Data		
No. of poles		16
DC Link Voltage U_{DC} (DC Link)		48
Rated Power P_N (W)		1257
Rated Torque T_N (N.m)		4
Rated Speed n_N (rpm)		3000
Rated Current I_N (A)		27
Maximum torque T_m (N.m)		10
Maximum Current I_m (A)		72
Standstill torque T_S (N.m)		4.4
Standstill current I_S (A)		29.8
Resistance line-line R_L (Ω)	±10%	0.058
Inductance line-line L_L (mH)	±20%	0.164
Electrical time constant τ_e (ms)		2.83
Mechanical time constant τ_m (ms)		0.93
Voltage constant K_e (V/krpm)	±5%	9.3
Torque constant K_t (Nm/A)		0.154
Rotor moment of inertia Jm (Kg.cm²)		2.19
Insulation class		F
Weight(Kg)		1.03
Feed back device		
Temperature Sensor		
Cooling method		Totally enclosed non-ventilated
Evironmental conditions: Temperature		guarantee the measured winding temperature is between -20℃ and 120℃
Evironmental conditions: Humidity		Below 90%RH (No dewing)
Evironmental conditions: Environment		Far away active gas,combustible gas,oil drop,ash.
Evironmental conditions: Installation altitude		UP TO 1000m:rated power, above 1000m:1.5% power decreasing per 100m,max.4000m

Performance Curve

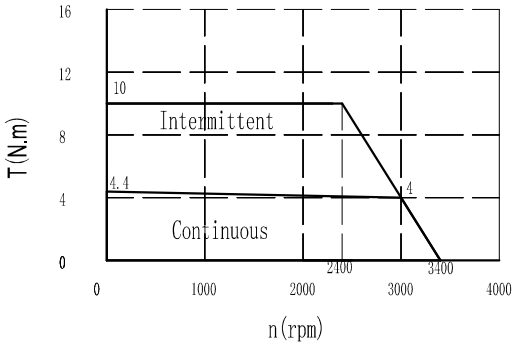

DC BRUSHLESS SERVO MOTOR
FMC09130-0125-3046N-8DS00

W	1257	V	48
A	27	Nm	4
RPM	3000	Ins	F

Kinavo Servo Motor (Changzhou) Ltd.
MADE IN CHINA
S/N: 307080XXXKYYDDDNNNN

REV	ECN NO.	DRN	APP`D	DATE

UNLESS OTHERWISE SPECIFIED TOLERANCES:
DECIMALS: .x ±0.5 .xx ±0.25 .xxx ±0.1
ANGULAR: ±0° 30`
UNIT: mm
DO NOT SCALE DRAWING

MATERIAL
CONTR.
FIRST ANGLE PROJECTION

DESIGN	ZZJ	DATE 22-03-02
CHECK	LSJ	22-03-02
APPD	SL	22-03-02
SCALE		
SHEET	OF	

P/N. 307080336SS
TITLE 外形图
USED ON FMC09130-0125-3046N-8DS00
DWG NO. REV V1.0

KINAVO MOTOR