FUNCTION	COLOR
MOTOR U	BLUE(18AWG)
MOTOR V	BROWN(18AWG)
MOTOR W	PURPLE(18AWG)

Power Wire

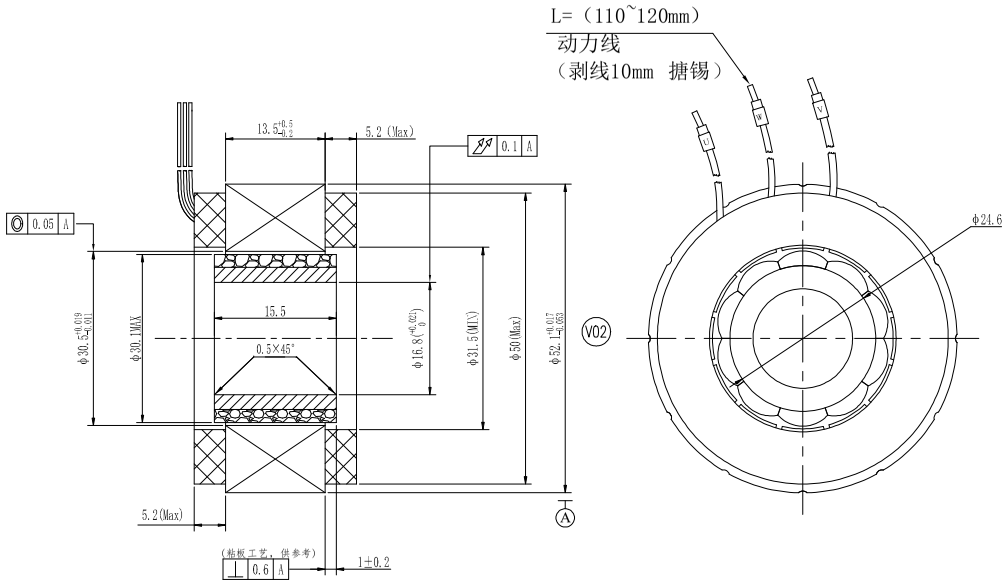

Tecnical Data		
No. of poles		10
DC Link Voltage U_{DC} (DC Link)		48
Rated Power P_N (W)		159
Rated Torque T_N (N.m)		0.4
Rated Speed n_N (rpm)		3790
Rated Current I_N (A)		4.4
Maximum torque T_m (N.m)		1.2
Maximum Current I_m (A)		13.6
Standstill torque T_S (N.m)		0.44
Standstill current I_S (A)		4.84
Special working point		0.5N.m at 3790rpm 5.7A for 5 seconds
Resistance line-line R_L (Ω)(at 25° C)	±20%	0.904
Inductance line-line L_L (mH)	±20%	0.94
Electrical time constant τ_e (ms)		1.04
Mechanical time constant τ_m (ms)		1.127
Voltage constant K_e (V/krpm)	±5%	6.13
Torque constant K_t (Nm/A)		0.1014
Rotor moment of inertia Jm (Kg.cm^2)		0.074
Insulation class		F
Weight(Kg)		0.22
Temperature Sensor		
Cooling method		Totally enclosed non-ventilated
Evironmental conditions: Temperature		guarantee the measured winding temperature is between -20℃ and 120℃
Evironmental conditions: Humidity		Below 90%RH (No dewing)
Evironmental conditions: Environment		Far away active gas,combustible gas,oil drop,ash.
Evironmental conditions: Installation altitude		UP TO 1000m:rated power, above 1000m:1.5% power decreasing per 100m,max.4000m

技术要求：
定子引出线按GB/T 7345-2008要求：
对定子三相线，每根引出线应能承受9.0N的拉力，
试验后，引出线不能断开，绝缘层和线芯不能损坏。

REV	ECN NO.	DRN	APP'D	DATE

UNLESS OTHERWISE SPECIFIED TOLERANCES:
DECIMALS: .x ±0.5 .xx ±0.25 .xxx ±0.1
ANGULAR: ±0°30'
UNIT: mm
DO NOT SCALE DRAWING

MATERIAL | CONTR.

FIRST ANGLE PROJECTION

		DATE
DESIGN	SL	19.9.30
CHECK	YJL	19.9.30
APPD	ZZJ	19.9.30
SCALE		
SHEET	OF	

P/N. 307080357SS
TITLE Outside Drawing
USED ON FMC05213-0015-3716N-5DK00
DWG NO. REV V1.0

KINAVO MOTOR